■ Please Install Under Professional Guidance
■ Please Read the Manual Before Use or Installation.
Keep The Manual Properly for Future Reference.

Stainless Steel
High Speed Hand Dryer

Model：

Manual Instruction

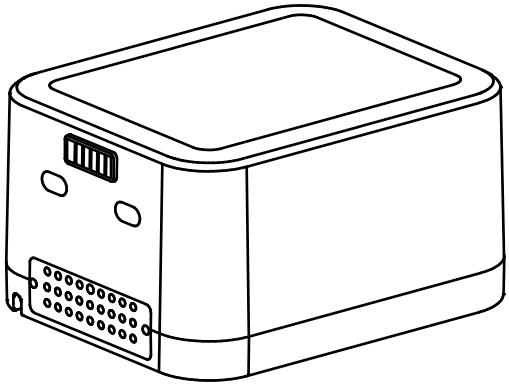

21V1.0

Content

Content ,Features, Specification, Dimension ····· 1

Important Safety Notice ····· 2

Fault Solution, Electric Diagrams ····· 3

Parts, Installation ····· 4

Installation ····· 5

Test, Maintenance, Packing List ····· 6

Features

- 304 Stainless Steel Shell
- Stainless Steel Base Plate, Mounting Plate and Stainless Steel Screws to Avoid Rusting On the Wall
- Innovative Integrated Structure: Noise Reduction, Shock Absorption, Insulation, Flame Resistance. Provide Quiet and Clean Hand Drying Environment
- High Dust Holding Capacity and Antibacterial Filter
- Non-contact Sensing Start
- High-Speed Airflow Quick Drying
- Automatic Heating in Winter, Comfortable Drying; Only Cooling in Summer.
- To Avoid Vandalism, The Hand Dryer Will Automatically Stop After 25 Seconds Consecutive Running. Retract the Hands and Reach Out Again. The Machine Works Again.

Technical Specification

Rated Voltage	220VAC	Noise Level	≤60dB(A)
Input Power	1350w	Motor	Series Motor
Motor Power	550w	Sensor Type	Automatic Sensing
Motor Speed	20000RPM	Dimension	220×270×165mm
Heating Power	800w	Product Weight	3.75Kg
Air Speed	100m/s	Automatic Heating Temperature	≤25±2℃

Dimension

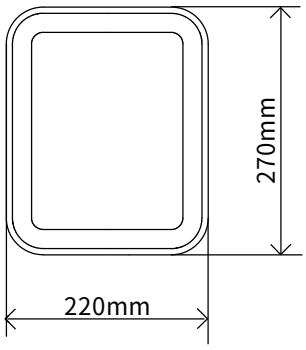

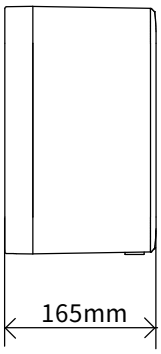

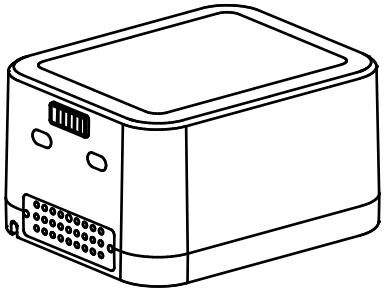

Important Safety Notice

For improper Use,it might cause serious personal injury

- Do not use the hand dryer in harsh environment.
  Malicious washing the machine is prohibited
- Do not use it in the rain or shower room or any places prone to condensation
  Otherwise it might cause electric shock or machine fault

- Do not spray the water on the machine
  Otherwise it might cause electric shock or machine fault

- Do not modify or dismantle the machine unnecessarily
  Otherwise it might cause fire, electric shock or injury accident
- If the machine doesn ’ t work or is abnormal, cut off the power to avoid any accident. Then report to the distributor.

- Must have reliable ground wires.
  Otherwise it might cause electric shock when the machine malfunctions or leakage.

Warning

- Please use rated power
  If it is 10% beyond the rated voltage, the machine might get fault.
  If the power supply is not standard, it might cause fire or electric shock.
- Please use a separate circuit
  If combined wiring with other appliances, it might cause over-heating of the socket and cause fire.
- Cut off the power during maintenance.
  Otherwise it might cause electric shock
- Installation must be operated by the professionals.
  Improper installation might cause electric shock, fire, falling, personal injury or other accidents.
- Leakage circuit breaker must be installed
  Otherwise it may cause electric shock
- This appliance can be used by children aged from 8 years and above and persons with reduced physical, sensory or mental capabilities or lack of experience and knowledge if they have been given supervision or instruction concerning use of the appliance in a safe way and understand the hazards involved.
- Children shall not play with the appliance.
- Cleaning and user maintenance shall not be made by children without supervision.
- The packing film might cause suffocation of the baby. Please dispose it properly.

- This machine is made by high-grade recyclable material.
  Please recycle it through the proper methods when dispose this machine.

Fault Solution, Electric Diagrams

If the following situation occurs, please follow the guidance to inspect and settle

Situation	Inspect	Settlement
Hands in but without airflow	• Check whether the power is cut or not • The hands are too close or too far • Check whether the switch is at on position (if the machine has the switch)	• Power On • Reach out the hands 3--12cm below the air outlet. • Settle the power switch in the on position
The machine runs and stops automatically after connected to the power.	• Check whether there are objects or dirt on sensor.	• Cut off the power and clean the sensor.
No warm air	• Check whether ambient temperature is over high.	• The heater works when the temperature is lower than 25±2°C
Low air speed	• Check whether the filter is too dirty.	• Clear or change the filter
If the machine can't be recovered after the above inspection and settlement, please cut off the power and have it repaired by your distributor.		

Electric Diagrams

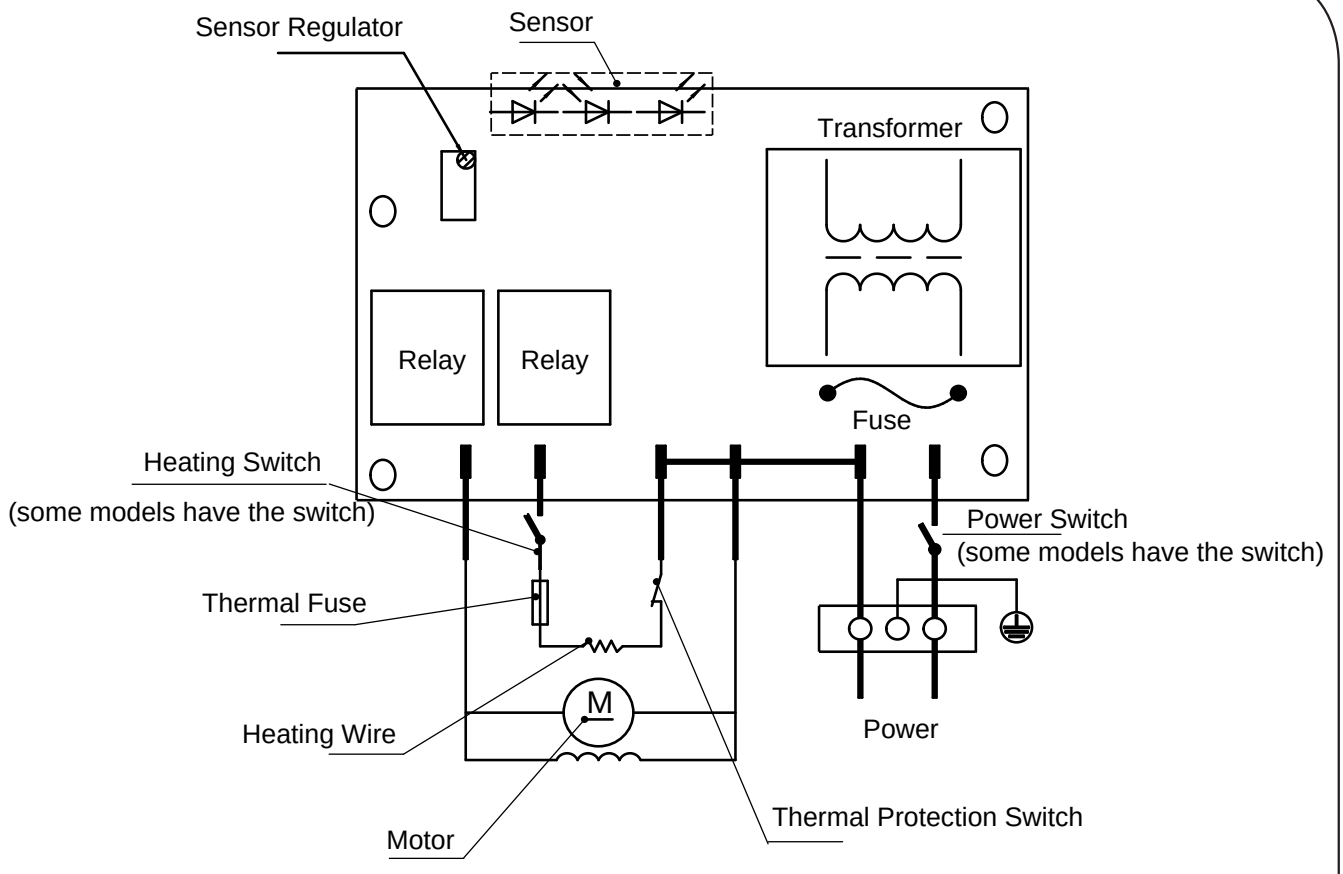

Adjust the sensing distance by turning the knob of sensor regulator.

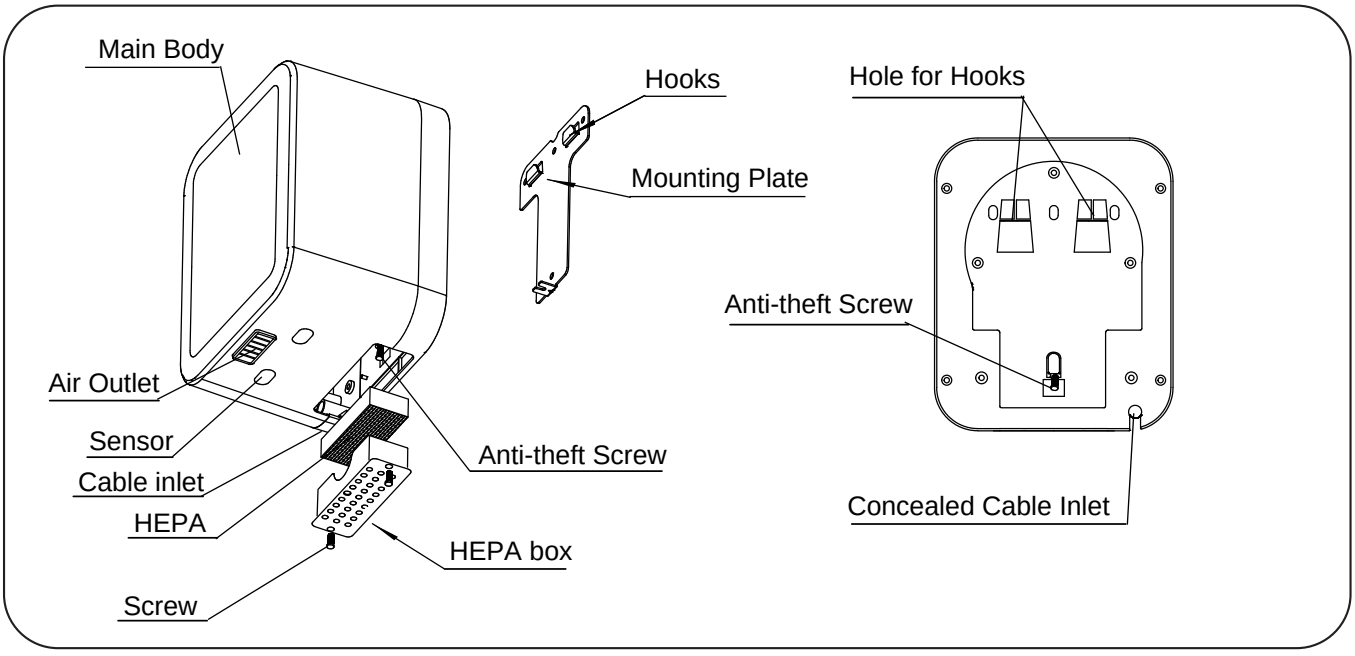

▲ Installation Notices

- Do not install when power is on
- Choose a place with sufficient strength
  Otherwise the machine might fall down and cause injury
- Install by the professionals
- Wear protective gloves when installing
  Otherwise it might cause injury

■ Do not install at the following places

- Lower than -10℃ or higher than 40℃
- Places directly exposed to water
- Places exposed to direct strong sunlight.
- Places prone to condensation
- Places with corrosive, oxidizing and reducing gases
- Places beyond altitude of 0-3000m

■ About Installation Location

- The bottom of the machine should be at least 200mm higher than any surface or objects
  Otherwise the machine might work automatically
- Please avoid installing at the place where easy to bump into people or doors
- Better not have mirrors or walls on both sides of the machine
  Otherwise the water will be spattered on the mirror or wall
- Please install the machine on the plain wall

1

Wall Treatment

- Stick the mounting plate on the wall and keep the upper side paralleled with the floor
- Drill 4 holes with 6mm Diameter and 35-40mm depth
- For hardwiring
  Open a square hole according to the right chart and put a junction box inside
  If there is no junction box, the cable would be out of the machine and it can't be installed

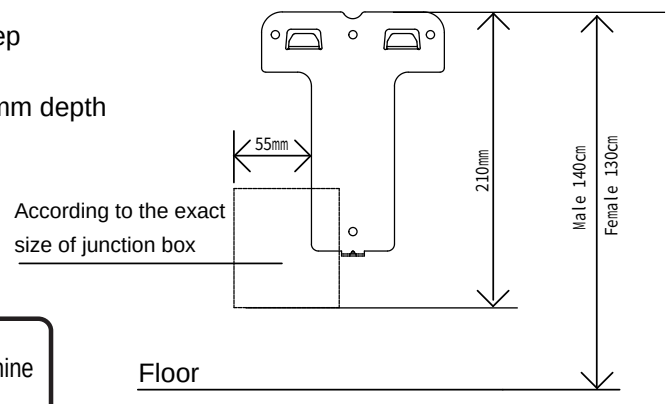

Warning

Junction box can't be beyond the outline of the machine
Otherwise it will affect the appearance

2

Fix the mounting plate

- Put the junction box into the square hole and insert plastic expansions into 6mm holes
- Fix the plate on the wall by three stainless steel screws.

  Notice: the mounting plate will be partially pressed to the junction box (for non-hardwire installation, no junction box)

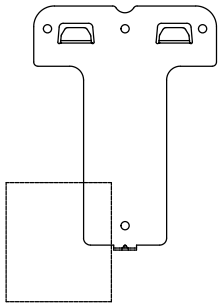

3

■ Please use rated single-phase AC(not beyond ±10% of the rated voltage).

■ Please use 1.5-2.0mm^2 multi-stranded cables (do not use single strand cable)

If the cable is longer than 5m, please use 2.0mm^2 cable

Install The Machine

- Take the machine close to the wall and put the extra wires into the junction box

  Note: Skip this process for non-hardware wire installation

- Align two holes on the back of the machine with two hooks of the mounting plate and move it up and down several times. After confirming that the two hooks of the mounting plate have completely fixed in the holes, release your hands.

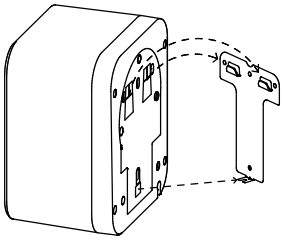

4

Install Anti-theft Screw

- Unscrew the 2 screws of the HEPA box with a screwdriver ;
- Pull out the filter box and HEPA
- Tighten the anti-theft screws with a screwdriver

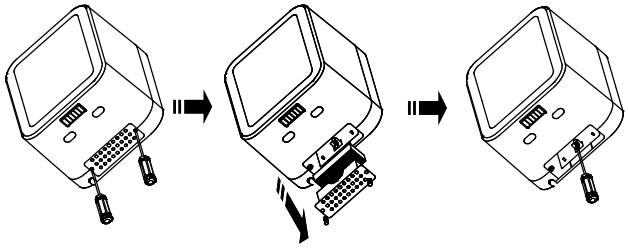

NOTE: When tightening the anti-theft screw, press the machine against the wall by hand

5

- Put back the filter box and HEPA
- Tighten the 2 screws of the box with a screwdriver

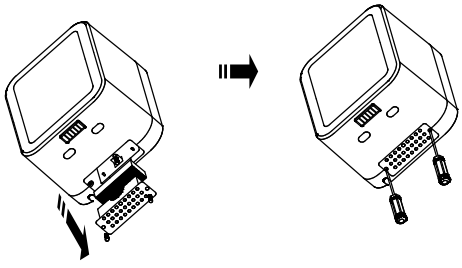

1

Test

- Check whether the machine is installed firmly
- Check the voltage
- Check whether the power is on
- Check whether the power switch is at on positon
  (Check whether the model has the switch)
- Reach out wet hand 5-10cm from the bottom
  and the machine will blow strong airflow drying the hand

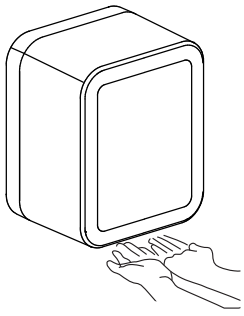

Maintenance of Outer Body

- Wipe with a wrung white towel
  If it is very dirty, you can wipe it with a white towel moistened with neutral detergent. Then wipe it with a dry towel
- Please cut off the power when cleaning the dirt on the sensor
- Replace HEPA, please take 4) and 5) for reference.

Caution
Be sure to cut off the power during maintenance

Attention Please

- Please do not use organic solvents, acid or alkaline toilet detergents, nylon brushes for cleaning. Otherwise it will spoil the appearance of the machine
- Can be disinfected with about 75% alcohol
- Change at least one new HEPA for each 1-year

Notice
Always wear protective gloves during maintenance

Packing List

The Machine.....1PC
Mounting Plate.....1PC
Install Screws.....4PCS
Plastic Expansion.....4PCS
Manual Instruction.....1PC